REVISION LETTER	GE ALTERATION NOTICE NUMBER

WARNING: THIS MANUAL IS ONLY FOR HYDRAULIC TENSIONERS WITH THE **ORANGE** SAFETY GUARD. DO NOT USE IF THE GUARD IS A DIFFERENT COLOR.

INSTRUCTION MANUAL IM-278
For Hydraulically Tensioned Studs and Nuts

Applicable Bolting Connections

9E Gas Turbine to Load Coupling
Load Coupling to Substitute Shaft
Substitute Shaft to Load Coupling
Load Coupling to 9A5 Generator

Applicable GE Ordering Sheet Part Numbers

102T3330P001	104T5015P001
102T3330P002	104T5015P002
102T3330P003	104T5015P003
102T3330P004	104T5015P004
102T3330P005	104T5015P005
102T3330P006	104T5015P006
102T3330P007	104T5015P007

GE Power Generation

GENERAL ELECTRIC COMPANY
Schenectady, NY

VENDOR SUPPLIED DRAWING

GE NOT TO REVISE. GE REVISION LEVEL IS AS SHOWN ON THIS APPLIQUE.
THIS DOCUMENT IS FILED UNDER THE GE DRAWING NUMBER

THIS DOCUMENT SHALL BE REVISED IN ITS ENTIRETY. ALL SHEETS OF THIS DOCUMENT ARE THE SAME REVISION LEVEL AS INDICATED IN THIS VENDOR SUPPLIED DRAWING APPLIQUE

FIRST MADE FOR: ___ OF ___

GE SIGNATURES	DATE	GE DRAWING NUMBER	REV
CHECKED		373A4054	
ISSUED			

The Riverhawk Company reserves the right to make changes updating this document without dissemination or notice. The latest revision level may be obtained by contacting Riverhawk Company directly or at our website www.riverhawk.com.

Riverhawk Company
215 Clinton Road.
New Hartford, NY 13413
Tel: 315-768-4855
Fax: 315-768-4941
Email: info@riverhawk.com

Table of Contents

Section	Description	Page Number
1.0	Cautions and Safety Warnings	3
2.0	Scope and GE Part Number Cross-Reference	4
3.0	Quick Check-List	5
4.0	General Preparations	10
5.0	Hardware Set Preparations	12
6.0	Nut and Stud Assembly	15
7.0	Assembly of Tensioner on Stud	18
8.0	Stud Pulling and Tensioning	20
9.0	Retensioning	24
10.0	Thread Locking	24
11.0	Stud/Nut Removal	25
12.0	Storage	26
13.0	Revision History	27
Appendix A	Frequently Asked Questions	28
Appendix B	Stretch Record Sheets	30
Appendix C	Declaration of Conformity	34

Riverhawk Company
215 Clinton Road.
New Hartford, NY 13413
Tel: 315-768-4855
Fax: 315-768-4941
Email: info@riverhawk.com

GE DRAWING NUMBER	REV.
373A4054	
FIRST MADE FOR:	SH.

1.0 Cautions and Safety Warnings

NOTICE

As of summer 2011, this manual is to be used in relation to the interlocking style tensioner. This new tensioner can be identified buy its ORANGE safety guard. Note: yellow guarded tensioner requires the use of different set of instructions, consult Riverhawk for assistance

TO AVOID FAILURE, ENSURE SAFETY AND PROPER OPERATION THE TENSIONER AND INTERLOCK SAFETY GUARD MUST INSTALLED ON THE FLANGE BEFORE TENSIONING BEGINS. DO NOT USE THE TENSIONER ASSEMBLY AT ANY PRESSURE UNLESS THE TOOL IS INSTALLED ON THE FLANGE.

CAUTION

Personal injury and equipment damage can occur if the puller screw is not securely engaged with the clean conical thread of the stud. Proper engagement is achieved when the puller screw is tight in the stud and is not cross-threaded into the conical thread. (Reference IM-220)

WARNING

The safety guard MUST be in place and hands kept out of designated areas at all times when the tensioner is pressurized otherwise personal injury can occur.

CAUTION

DO NOT EXCEED THE MAXIMUM PRESSURE MARKED ON THE TENSIONER. Excessive pressure can damage the stud and the puller screw.

WARNING:

Keep hands clear of the tool while the pressure is building up. This includes the pin wrench for tightening the spanner ring (nut). Once the tool is stabilized at pressure then and only then can the nut be tightened. This reduces the potential of personal injury.

Note: Before threading the puller screw into the stud, carefully check the cleanliness of both the stud's and the puller screw's conical threads. Apply a light coat of clean turbine oil or a spray lubricant to the puller screw. Do not use "Never Seize" on the conical threads. This procedure will ease assembly and assure positive mating of the threads before tightening.

Riverhawk Company
215 Clinton Road.
New Hartford, NY 13413
Tel: 315-768-4855
Fax: 315-768-4941
Email: info@riverhawk.com

GE DRAWING NUMBER	REV.
373A4054	
FIRST MADE FOR:	SH.

2.0 Scope

This document describes the steps to install a set of hardware containing the studs and nuts supplied by Riverhawk Company at the turbine/coupling; coupling/substitute shaft; substitute shaft/coupling and coupling/generator connections. This hardware is depicted on the following drawings. These drawings as well as tooling drawings form part of this manual.

Riverhawk Hardware Set Part Number	GE Drawing Number for Hardware Set	GE Ordering Sheet Part Number	Hardware Set Description
HF-5369	269B8701	102T3330P001 102T3330P002# 104T5015P001 104T5015P002#	2-3/4" hardware for All 4 bolted joints.
-	-	102T3330P003# 104T5015P003#	Hydraulic installation tooling only
HF-5578	269B8737	102T3330P004 104T5015P004	2-3/4" hardware for the turbine end to load coupling connection.
HF-5579	269B8738	102T3330P005 104T5015P005	2-3/4" load coupling to substitute shaft connection.
HF-5580	269B8739	102T3330P006 104T5015P006	2-3/4" substitute shaft to load coupling connection.
HF-5581	269B8740	102T3330P007 104T5015P007	2-3/4" load coupling 9A5 generator connection.

# denotes GE part numbers that include hydraulic tooling

Other Important Reference Documentation:

IM-293 (GE 373A4058) Instruction Manual for GE Hydraulic Pump Kit
IM-220 (GE 373A4025) Cleaning Procedure of the Conical Threads on Riverhawk Studs

Riverhawk Company
215 Clinton Road.
New Hartford, NY 13413
Tel: 315-768-4855
Fax: 315-768-4941
Email: info@riverhawk.com

GE DRAWING NUMBER	REV.
373A4054	
FIRST MADE FOR:	SH.

3.0 Quick Checklist

The following checklist is intended as a summary of the steps needed to use the Riverhawk-supplied equipment. New personnel or those experienced personnel who have not used the Riverhawk equipment recently are encouraged to read the entire manual.

EQUIPMENT INSPECTION

☐ • Check hydraulic hose for any damage.

☐ • Test pump, see pump instruction manual **IM-293** for procedure.

☐ • Inspect tensioner for any damage.

NUT AND STUD PREPARATION

☐ • Inspect studs and nuts for any damage.

☐ • Clean the studs and nuts (Reference **IM-220**).

☐ • Measure stud lengths and record on stretch datasheets. **(VERY IMPORTANT)**

☐ • Install studs and nuts into the flange.

☐ • Set stick-out dimension on the conical thread end of stud.

☐ • Hand tighten nuts on backside of stud.

☐ • Verify stick-out measurement **(VERY IMPORTANT)**

Riverhawk Company
215 Clinton Road.
New Hartford, NY 13413
Tel: 315-768-4855
Fax: 315-768-4941
Email: info@riverhawk.com

GE DRAWING NUMBER	REV.
373A4054	
FIRST MADE FOR:	SH.

Tensioning (Stud installation)

- ☐ • Check tensioner's drawing for correct parts and part numbers.
- ☐ • Apply a light coat of clean turbine oil or spray lubricant to the puller screw. **DO NOT USE "NEVER SEIZE" ON THE CONICAL THREADS.**
- ☐ • Install spanner ring onto nut.
- ☐ • Thread puller screw onto the stud.
- ☐ • Insert Allen wrench into the back side of the stud to stop the stud from rotating when installing puller screw.
- ☐ • Using an Allen wrench, tighten the puller screw. Then back off puller screw 1/2 a turn.
- ☐ • Retighten puller screw by hand until it is fully inserted. **DO NOT BACK OFF PULLER SCREW.**
- ☐ • Slide foot over puller stud and orientate into position.
- ☐ • Thread the tensioner onto puller screw. Lightly turn the tensioner onto the puller screw, until it stops. The gap between the foot and tensioner is about 1/16" to 3/16".
- ☐ • Place guard over tensioner and position guide pin into the hole in the backside of the stud.
- ☐ • Tighten knurled interlock fitting by hand until it presses firmly against tensioner. (no gap)
- ☐ • Slide and engage custom connector from rear of guard to lock tensioner into place.
- ☐ • Tension to 50%. Consult manual for correct pressure.

Continued on next page.

Riverhawk Company
215 Clinton Road.
New Hartford, NY 13413
Tel: 315-768-4855
Fax: 315-768-4941
Email: info@riverhawk.com

GE DRAWING NUMBER	REV.
373A4054	
FIRST MADE FOR:	SH.

Tensioning (Stud installation) Continued from previous page

- ☐ • Use the pin wrench in spanner ring to tighten nut.
- ☐ • Release pressure, allow tensioner to fully retract.
- ☐ • Disconnect hose from tensioner.
- ☐ • Loosen knurled fitting and remove guard.
- ☐ • Unscrew tensioner from puller screw. Use **caution** to insure that hands are not between tensioner and coupling when tensioner becomes disengaged from puller screw.
- ☐ • Remove foot.
- ☐ • Remove puller screw from stud.
- ☐ • Remove spanner ring from nut, move to next stud in pattern.
- ☐ • Tension all studs to 50% before proceeding to final pressure.
- ☐ • Repeat above steps at final pressure.
- ☐ • Measure final stud length and record on stretch datasheets. Calculate stretch and verify per section 8.2
- ☐ • Torque nuts' set screws per section 10.

Riverhawk Company
215 Clinton Road.
New Hartford, NY 13413
Tel: 315-768-4855
Fax: 315-768-4941
Email: info@riverhawk.com

GE DRAWING NUMBER	REV.
373A4054	
FIRST MADE FOR:	SH.

Detensioning (Stud removal)

- ☐ • Loosen nuts' set screws
- ☐ • Inspect and clean studs' conical threads. **Do not continue until ALL debris is removed from the threads!** Reference instruction manual IM-220. **Do not try to use the tensioner to remove a damaged stud!**
- ☐ • Apply a light coat of clean turbine oil or spray lubricant to the puller screw. **DO NOT USE "NEVER SEIZE" ON THE CONICAL THREADS.**
- ☐ • Install spanner ring onto nut.
- ☐ • Thread puller screw onto the stud.
- ☐ • Using Allen wrench tighten the puller screw. Then back off puller screw 1/2 a turn.
- ☐ • Lightly retighten puller screw by hand until it is fully inserted. **DO NOT BACK OFF PULLER SCREW.**
- ☐ • Slide foot over puller stud and orientate into position.
- ☐ • Thread the tensioner onto puller screw. Lightly turn the tensioner onto the puller screw until it stops. The gap between the foot and tensioner is about 1/16" to 3/16".
- ☐ • Place guard over tensioner and position guide pin into the hole in backside of stud.
- ☐ • Tighten knurled interlock fitting by hand until it firmly presses against tensioner. (no gap)

Continued on next page.

Riverhawk Company
215 Clinton Road.
New Hartford, NY 13413
Tel: 315-768-4855
Fax: 315-768-4941
Email: info@riverhawk.com

GE DRAWING NUMBER	REV.
373A4054	
FIRST MADE FOR:	SH.

Detensioning (Stud removal) Continued from previous page

- ☐ • Slide and engage custom connector from rear of guard to lock tensioner into place.
- ☐ • Apply final pressure.
- ☐ • Loosen nut with the spanner ring and pin wrench.
- ☐ • Release pressure, allow tensioner to fully retract.
- ☐ • Disconnect hose from tensioner.
- ☐ • Loosen knurled fitting and remove guard.
- ☐ • Unscrew tensioner from puller screw.
- ☐ • Remove foot.
- ☐ • Remove puller screw from stud. It may be necessary to insert an Allen wrench into the backside of stud to remove puller screw.
- ☐ • Remove spanner ring from nut.
- ☐ • Move to next stud in pattern.

Riverhawk Company
215 Clinton Road.
New Hartford, NY 13413
Tel: 315-768-4855
Fax: 315-768-4941
Email: info@riverhawk.com

GE DRAWING NUMBER	REV.
373A4054	
FIRST MADE FOR:	SH.

4.0 General Preparations

Read and understand all instructions before installing and tensioning studs

This equipment produces very high hydraulic pressures and very high forces. Operators must exercise caution, and proper personal safety equipment must be worn at all times. Contact the site's health and safety office to determine all applicable safety rules and regulations.

High-pressure fluid from the Hydraulic Pressure Kit system pressurizes the tensioner which generates a stretching force that actually stretches the stud. As the stud is stretched the nut lifts off the flange. The nut is then reseated into position on the flange by turning spanner ring with the pin wrench. When the nut is tight against the flange, the pressure in the tensioner is released leaving the stud loaded to its predetermined value.

4.1 Machine Preparation

The flange to be tensioned must be fully closed prior to positioning of studs in the flanges. Turning the shafts of the turbine and the generator will be required. Also, it will be advantageous to remove as many obstructions as possible from the flange area, such as speed probes, shipping plates, and conduit.

4.2 Hardware – Balance

Hardware is supplied as weight balanced sets. Studs and Nuts are interchangeable within a set. Do not mix stud and nuts from multiple sets.

Save the weight certification that is supplied with each set. It will be needed for the purchase of replacement hardware

4.3 Tensioner – Care and Handling

When not in use, the tensioner shall be maintained in a clean environment with all caps and plugs for hydraulic openings and fittings in place.

When in use, the tensioner shall be protected from sand and grit.

Riverhawk Company
215 Clinton Road.
New Hartford, NY 13413
Tel: 315-768-4855
Fax: 315-768-4941
Email: info@riverhawk.com

GE DRAWING NUMBER	REV.
373A4054	
FIRST MADE FOR:	SH.

4.4 Hand Tools

Several hand wrenches and micrometers may be required to perform installation and measurement of the studs:

5/8" wrench
A set of Allen Wrenches
3' – 4' Breaker Bar
10" to 11" micrometer or caliper

4.5 Special Tools

Hydraulic Tensioner Kit:	HT-5506	Hydraulic Tensioner (reference GE 269B8736)
	HT-5506-IT	Hydraulic Tensioner (Italian) (reference GE 269B8749)
Hydraulic Pump Kit:	AP-0532	Air-Operated Hydraulic Pump (recommended) (reference GE 359B2502)
	AP-0523-IT	Air-Operated Hydraulic Pump (Italian) (reference GE 269B8750)
	MP-0130	Manual Hand-Operated Hydraulic Pump (reference GE 359B2506)

Riverhawk Company
215 Clinton Road.
New Hartford, NY 13413
Tel: 315-768-4855
Fax: 315-768-4941
Email: info@riverhawk.com

GE DRAWING NUMBER	REV.
373A4054	
FIRST MADE FOR:	SH.

5.0 Preparation of Hardware

5.1 Nut Preparation

Sample Picture of a Riverhawk Locknut

If there is any visible damage on a nut, do not use the nut and contact the Riverhawk Company for a replacement nut. Please be prepared to supply the turbine number, weight certification, and digital photographs for evaluation.

5.1.1 Nut Cleaning – New Installations

For new installations, the nuts should come sealed from the factory and will need no cleaning.

5.1.2 Nut Cleaning – Old Installations

Previously installed nuts require cleaning as follows:
Wire brush using a petroleum based solvent to remove any foreign material on the external surfaces and threads.

Riverhawk Company
215 Clinton Road.
New Hartford, NY 13413
Tel: 315-768-4855
Fax: 315-768-4941
Email: info@riverhawk.com

GE DRAWING NUMBER	REV.
373A4054	
FIRST MADE FOR:	SH.

5.2 Stud Preparation

Check the stud for any visible damage. If there is any visible damage, do not use the stud and contact the Riverhawk Company for a replacement stud. Please be prepared to supply the turbine number, weight certification, and digital photographs for evaluation.

The conical threads of each stud must be clean before installation or removal. This ensures the proper seating of the puller screw.

5.2.1 Stud Cleaning – New Installations

For new installations, the studs should come sealed from the factory and will need no cleaning.

5.2.2 Stud Cleaning – Old Installations

Previously installed studs will require cleaning. Clean conical threads should have a bright and shiny appearance. Use instruction manual **IM-220** for more detailed instructions.

Notice:
Failure to properly clean the studs could result in improper mating of threads. Personal injury and equipment damage can occur if the puller screw is not securely engaged with the tapered thread of the stud.

If cleaning is required, follow these steps:

1. Blow out the threads with compressed air to remove loose debris and dry conical threads. Reference instruction manual IM-220 for more detailed instructions. Do not apply a solvent or other cleaning solution to the threads as this may chemically attack the stud.

2. Use Stud Cleaning Kit, GT-4253 or a similar 1" diameter Brass power brush.

Picture of Brass Power Brush

3. Insert the brush into an electric drill and set drill to run in a counterclockwise direction at high speed.

Riverhawk Company
215 Clinton Road.
New Hartford, NY 13413
Tel: 315-768-4855
Fax: 315-768-4941
Email: info@riverhawk.com

GE DRAWING NUMBER	REV.
373A4054	
FIRST MADE FOR:	SH.

4. Work the drill in a circular motion while moving the brush in and out to clean all of the threads. Try not to hold the brush in one place too long, so as not to remove the stud's protective coating.

5. Blow out the threads with compressed air to remove loosened debris.

6. Visually inspect threads for cleanliness. Threads should be bright and shiny.

7. Repeat if any dirt can be seen in the threads.

8. Inspect threads for any damage that may have been caused by previous installation.

Do not apply thread lubricants to the threads.

Finish the cleaning process by rinsing in a volatile solvent such as acetone and allow to dry.

5.3 Stud Length Measurement

Measure and record the initial lengths of the studs on the supplied stretch datasheet in Appendix B of this manual.

The following recommendations will improve your results.

- Plan to start and finish any flange in the same day.
- Studs and flange must be at the same temperature.
- Keep the measuring instruments out of the sunlight.
- Number each stud with a marker for later stretch measurement tracking.
- Mark the location of measurement on stud end with a permanent marker.
- The same person should make all measurements.
- Measure each stud to nearest 0.001 inch (.01 mm) or better.
- Record each measurement on the stretch record sheets in this manual's appendix.

Riverhawk Company
215 Clinton Road.
New Hartford, NY 13413
Tel: 315-768-4855
Fax: 315-768-4941
Email: info@riverhawk.com

GE DRAWING NUMBER	REV.
373A4054	
FIRST MADE FOR:	SH.

6.0 Stud and Nut Assembly

Refer to Hardware Set Part Number drawing listed in Section 2.0 of this manual. If you don't have a hardware set drawing, it can be found in the GE drawing system or contact Riverhawk Company.

Assemble the nut to the conical tensioning thread end (front side) of the stud.

Slide the assembly into the flange from the coupling side as shown in Figures 1 thru 4 then install the other nut on the backside.

Insure that backside's nut orientation is correct with thread locking screws facing outward of the flange.

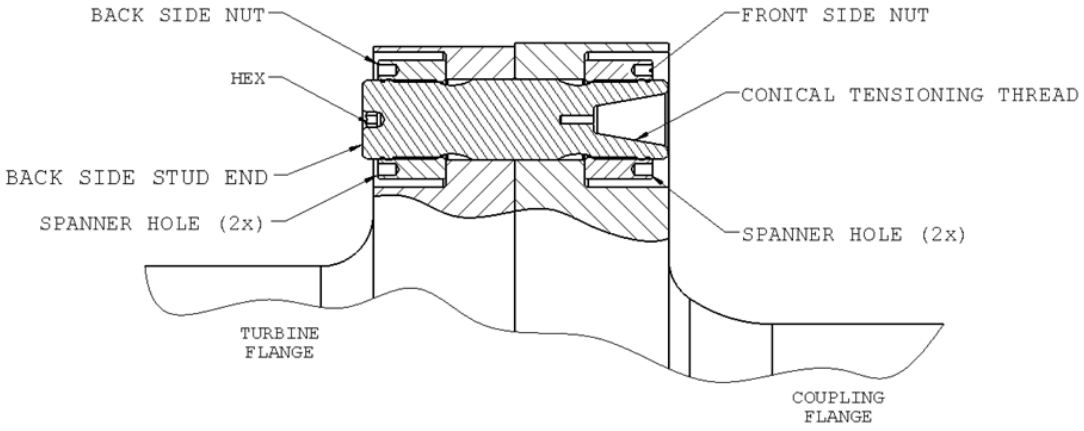

Figure 1 – Cutaway View of Turbine Flange and Coupling Flange Bolted Joint

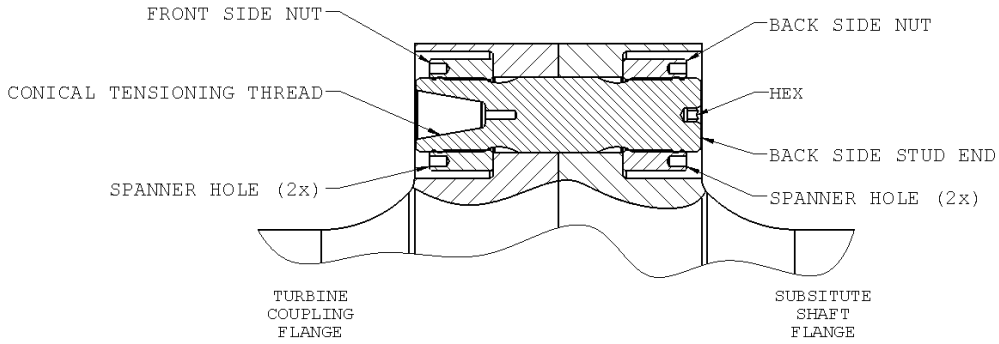

Figure 2 – Cutaway View of Turbine Load Coupling and Substitute Shaft Bolted Joint

215 Clinton Road.
New Hartford, NY 13413
Tel: 315-768-4855
Fax: 315-768-4941
Email: info@riverhawk.com

GE DRAWING NUMBER	REV.
373A4054	
FIRST MADE FOR:	SH.

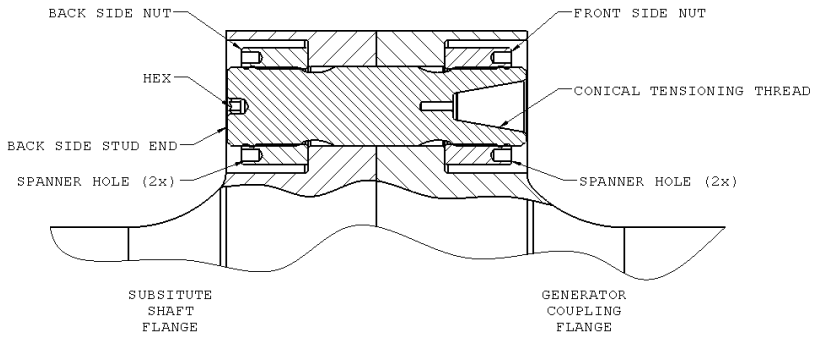

Figure 3 – Cutaway View of Substitute Shaft and Generator Load Coupling Bolted Joint

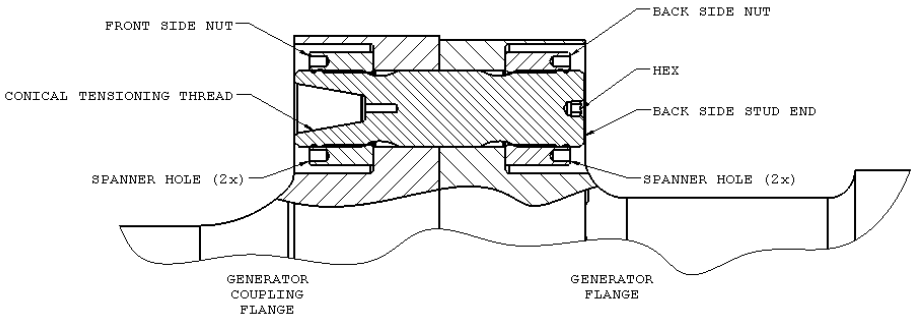

Figure 4 – Cutaway View of Generator Load Coupling and Generator Flange Bolted Joint

Adjust the front side stud/nut assembly so that the stud sticks out from the face of the nut the amount shown on the hardware set drawing. If you don't have a hardware set drawing, it can be found in the GE drawing system or contact Riverhawk Company. (See section 2**)**

SETTING THE STICK-OUT LENGTH IS CRITICAL FOR THE HYDRAULIC TENSIONER TO WORK CORRECTLY.

THE STICK-OUT LENGTH IS ALWAYS SET FROM THE COUPLING SIDE OF THE FLANGE.

215 Clinton Road.
New Hartford, NY 13413
Tel: 315-768-4855
Fax: 315-768-4941
Email: info@riverhawk.com

GE DRAWING NUMBER	REV.
373A4054	
FIRST MADE FOR:	SH.

The stick-out length can be checked three different ways.

Stick-Out Gage

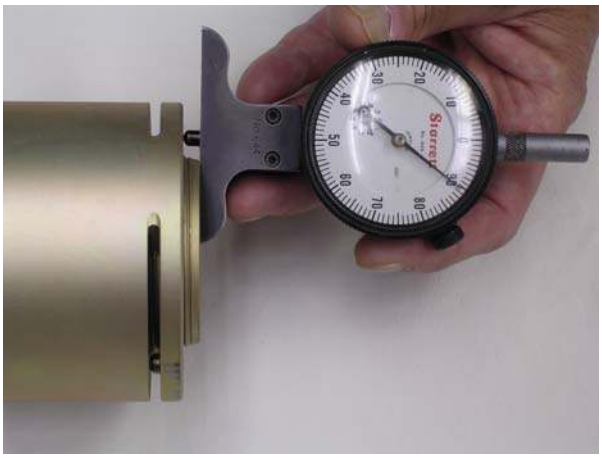

Drop Gage

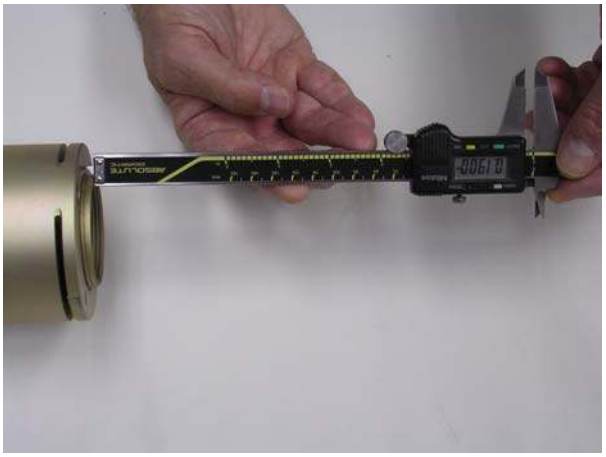

Digital Calipers

Sample Pictures of a Stick-Out Measurement

Riverhawk Company
215 Clinton Road.
New Hartford, NY 13413
Tel: 315-768-4855
Fax: 315-768-4941
Email: info@riverhawk.com

GE DRAWING NUMBER	REV.
373A4054	
FIRST MADE FOR:	SH.

7.0 Assembly of Tensioner on Stud

All tensioning will be performed from the conical tensioning thread end of the stud with orientation of the stud to the flange as shown in Figures 1 thru 4.

7.1 Assembly of Tensioner Kit with ORANGE Safety Guard

Refer to Tensioner drawing and Figure 6 for tensioner to flange mounting. Assembly sequence is as follows:

1. Carefully check the cleanliness of both the stud's and the puller screw's conical threads.
2. Insure stud length measurement is documented.
3. Verify stick out length of stud to nut.
4. Apply a light coat of clean turbine oil or a spray lubricant to the puller screw. Do not use "Never Seize" on the conical threads.
5. Place the spanner ring onto the nut
6. Insert the puller screw into the tapered thread of the stud and hand tighten. Be sure not to cross-thread the assembly
7. Using an Allen wrench tighten puller screw, then back off puller screw 1/2 a turn.
8. Retighten puller screw by hand until it is fully inserted. **DO NOT BACK OFF PULLER SCREW.**
9. Place the foot over puller screw, orientate into position.
10. Thread tensioner onto puller screw. Note: Internal stop in tensioner will result in gap with foot. **DO NOT TIGHTEN TENSIONER AGAINST FOOT. (GAP SHOULD BE 1/16" to 3/16")**
11. Place guard over tensioner and position guide pin into hex end of stud.
12. Tighten knurled interlock fitting by hand until it firmly presses against tensioner. (no gap)
13. Activate custom connector from rear of guard by pushing on the center with your thumb and pulling the tabs with your fore finger and middle finger. Push the assembly forward until it locks onto the tensioner. Release fingers from tabs and then remove thumb. Ensure connection is firmly engaged or else the tensioner will not be connected to pump. (Figure 5)

Riverhawk Company
215 Clinton Road.
New Hartford, NY 13413
Tel: 315-768-4855
Fax: 315-768-4941
Email: info@riverhawk.com

GE DRAWING NUMBER	REV.
373A4054	
FIRST MADE FOR:	SH.

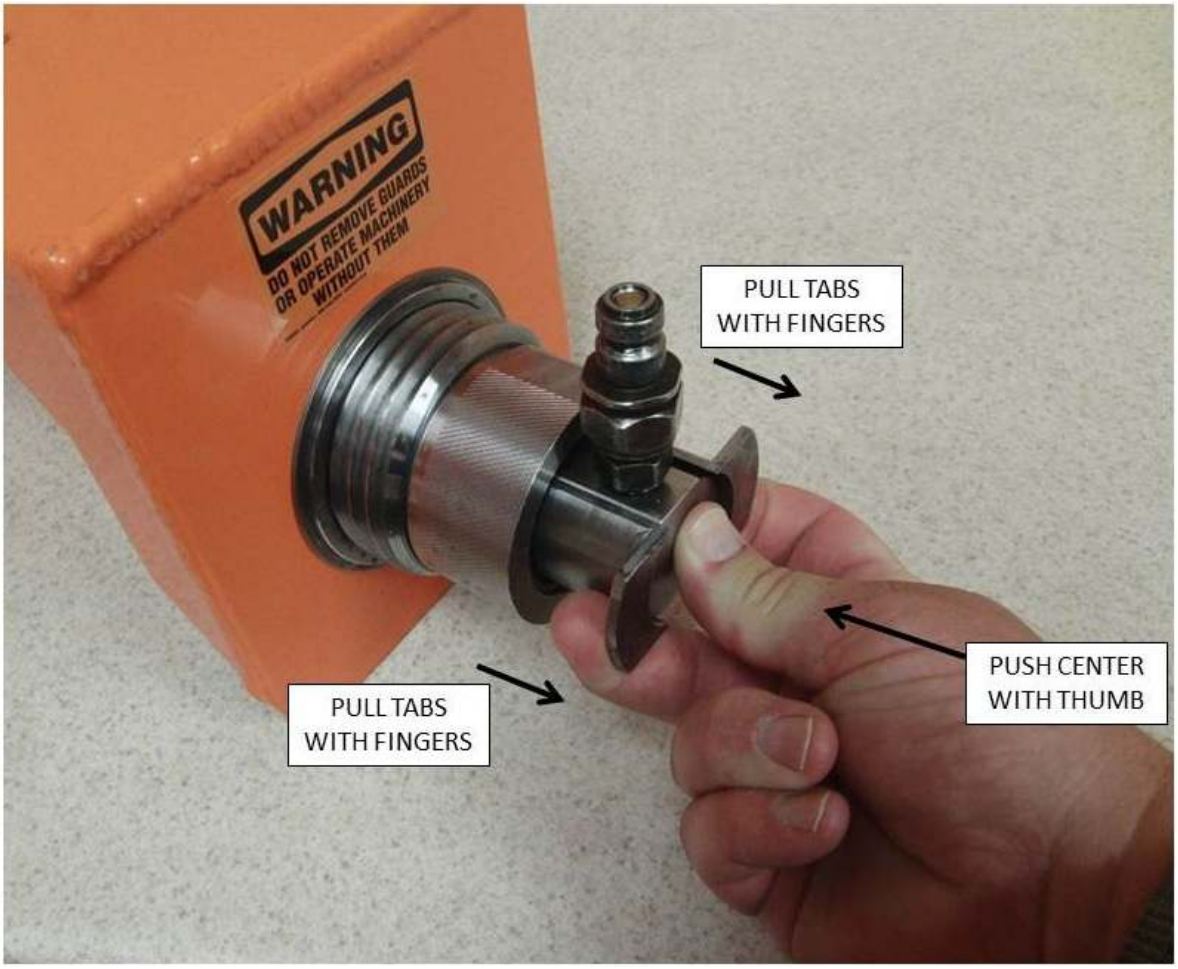

Figure 5 – Activation of custom connector

215 Clinton Road.
New Hartford, NY 13413
Tel: 315-768-4855
Fax: 315-768-4941
Email: info@riverhawk.com

GE DRAWING NUMBER	REV.
373A4054	
FIRST MADE FOR:	SH.

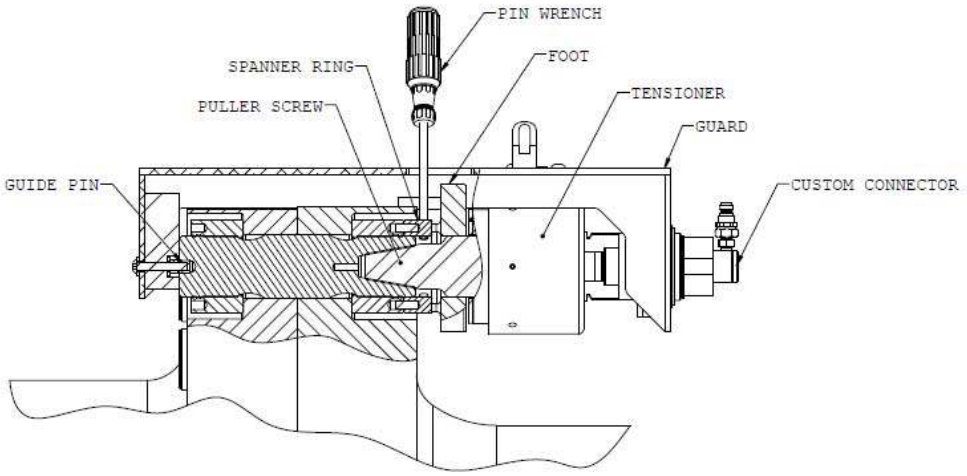

Figure 6 – Cutaway View of Tensioner Installed on Flange

CAUTION

Personal injury and equipment damage can occur if the puller screw is not securely engaged with the conical threads of the stud. Proper engagement is achieved when the puller screw is tight in the stud and is not cross-threaded into the conical thread.

8.0 Stud Pulling and Tensioning

The studs will be tensioned in two steps, at 50% pressure and at final pressure. Follow the tensioning sequence for each flange joint as defined on the data sheets found at the end of this manual.

Note: Before threading the puller screw into the stud, carefully check the cleanliness of both the stud's and the puller screw's conical threads. Apply a light coat of clean turbine oil or a spray lubricant to the puller screw. Do not use "Never Seize" on the conical threads. This procedure will ease assembly and assure positive mating of the threads before tightening.

WARNING

The safety guard MUST be in place and hands kept out of designated areas at all times when the tensioner is pressurized otherwise personal injury can occur.

Riverhawk Company
215 Clinton Road.
New Hartford, NY 13413
Tel: 315-768-4855
Fax: 315-768-4941
Email: info@riverhawk.com

GE DRAWING NUMBER	REV.
373A4054	
FIRST MADE FOR:	SH.

8.1 Tensioning at 50% pressure

After the tensioner is properly installed apply hydraulic pressure to the tool. Bring the pressure to the 50% level in accordance with the following table.

Flange Position	Stud Size	50% Pressure	50% Stretch
Turbine to Coupling	2-3/4" [71 mm]	10000 psi [690 bar]	Do not measure Do not use
Coupling to Substitute Shaft	2-3/4" [71 mm]	10000 psi [690 bar]	Do not measure Do not use
Substitute Shaft to Coupling	2-3/4" [71 mm]	10000 psi [690 bar]	Do not measure Do not use
Coupling to Generator	2-3/4" [71 mm]	10000 psi [690 bar]	Do not measure Do not use

8.1.1 Tightening of Nuts

Tighten the cylindrical nuts hand tight using the pin wrench and spanner ring, as depicted in Figure 4. Turn the nut until it bottoms on the flange. Then apply torque to turn the nut an additional 5 degrees. This will aid in achieving the desired stretch.

WARNING:

Keep hands clear of the tool while the pressure is building up. This includes the pin wrench for tightening the spanner ring (nut). Once the tool is stabilized at pressure then and only then can the nut be tightened. This reduces the potential of personal injury.

Riverhawk Company
215 Clinton Road.
New Hartford, NY 13413
Tel: 315-768-4855
Fax: 315-768-4941
Email: info@riverhawk.com

GE DRAWING NUMBER	REV.
373A4054	
FIRST MADE FOR:	SH.

8.2 Removing the Tensioner from an Installed Stud

The tensioner removal is to be accomplished by the follows steps:

1. Release the tensioner tool pressure by opening the valve on the pump. Leave valve open. (This is automatic on the air-operated hydraulic pump) Allow approximately 20 seconds for tensioner to fully retract, then remove hose from tensioner.
2. Unscrew knurled fitting at the end of the guard and remove guard.
3. Unscrew tensioner from puller screw. Use caution to ensure that hands are not between tensioner and coupling when tensioner becomes disengaged from puller screw.
4. Remove the foot.
5. Unscrew the puller screw using an Allen wrench.
6. Tapping the Allen wrench with a hammer or the use of a 3-4’ breaker bar may be necessary to loosen the puller screw.
7. Remove the spanner ring from nut.
8. Move the tool to the next stud/nut assembly to be tensioned, following the sequence/pattern as defined on the supplied data sheets.

Riverhawk Company
215 Clinton Road.
New Hartford, NY 13413
Tel: 315-768-4855
Fax: 315-768-4941
Email: info@riverhawk.com

GE DRAWING NUMBER	REV.
373A4054	
FIRST MADE FOR:	SH.

8.3 Tensioning at Final Pressure

Repeat the pulling and tightening procedure stated above at full pressure. Measure each stud's length after all of the studs have been tensioned. The final pressure and required stretch values are listed in the following table:

Flange Position	Stud Size	Final Pressure	Final Stretch
Turbine to Coupling	2-3/4" [71 mm]	19000 psi [1310 bar]	0.011" - 0.014" [0.28 mm - 0.35 mm]
Coupling to Substitute Shaft	2-3/4" [71 mm]	19000 psi [1310 bar]	0.011" - 0.014" [0.28 mm - 0.35 mm]
Substitute Shaft to Coupling	2-3/4" [71 mm]	19000 psi [1310 bar]	0.011" - 0.014" [0.28 mm - 0.35 mm]
Coupling to Generator	2-3/4" [71 mm]	19000 psi [1310 bar]	0.011" - 0.014" [0.28 mm - 0.35 mm]

Note: Before threading the puller screw into the stud, carefully check the cleanliness of both the stud's and the puller screw's conical threads. Apply a light coat of clean turbine oil or spray lubricant to the puller screw. Do not use "Never Seize" on the conical threads. This procedure will ease assembly and assure positive mating of the threads before tightening. **DO NOT BACK OFF THE PULLER SCREW.**

CAUTION

DO NOT EXCEED THE MAXIMUM PRESSURE MARKED ON THE TENSIONER. Excessive pressure can damage the stud and puller screw.

Have final stretch values approved by the supervisor responsible for the installation.

NOTICE

Failure to achieve proper final stretch values will result in improperly tensioned stud.

Riverhawk Company
215 Clinton Road.
New Hartford, NY 13413
Tel: 315-768-4855
Fax: 315-768-4941
Email: info@riverhawk.com

GE DRAWING NUMBER	REV.
373A4054	
FIRST MADE FOR:	SH.

9.0 Retensioning

For the procedures of Section 8, excessive stretch variations or low stretch values can be corrected by removing all or selected studs. Then re-measure the studs and install to the pressure values stated in the above table. Have final stretch values approved by the supervisor responsible for the installation.

10.0 Thread Locking

Once pulling and tensioning is completed all stud nuts must be locked in position.

Sample Picture of a Riverhawk Locknut

Mechanical Locknuts have two set screws located in the top face, see picture. Before threading the nut onto the stud check to be certain that the set screws are free to turn. Once the nut is seated, torque the set screws to the values specified in the following table. When seated and torqued to the values specified the load created by the set screw displaces the thread of the nut in the area of the web creating the desired locking action.

Stud Size	Set Screw Size	Torque
2-3/4" [71 mm]	3/8"-24 UN	200 in·lbs - 250 in·lbs [22.6 N·m - 28.2 N·m]

Riverhawk Company
215 Clinton Road.
New Hartford, NY 13413
Tel: 315-768-4855
Fax: 315-768-4941
Email: info@riverhawk.com

GE DRAWING NUMBER	REV.
373A4054	
FIRST MADE FOR:	SH.

11.0 Stud/Nut removal

Begin by checking the stick-out dimension of the installed studs. If the stick-dimensions are wrong, contact Riverhawk for assistance.

11.1 Removal of Assemblies with Mechanical Locknuts

For those assemblies which have been locked using mechanical locknuts, removal is accomplished as follows:

- Using a wire brush, GT-4253, and shop air clean the conical thread of the stud to remove any debris/deposits which may have accumulated during service as described in section 5.2.
- With an Allen-wrench loosen the two locking set screws but do not remove from the nut. Use of penetrating oil may help to loosen set screws.

Sample Picture of the loosening of a nut's set screws

- Install the appropriate tensioner onto the stud as described in Section 7.0.
- Apply the appropriate hydraulic pressure per the Table of Section 8.3.
- Using the spanner ring and spanner/pin wrenches, loosen the nut 3/4 turn. Then release the pressure and remove the tensioner.

Riverhawk Company
215 Clinton Road.
New Hartford, NY 13413
Tel: 315-768-4855
Fax: 315-768-4941
Email: info@riverhawk.com

GE DRAWING NUMBER	REV.
373A4054	
FIRST MADE FOR:	SH.

12.0 Storage Instructions

Follow these directions to properly store your hydraulic tensioner kit for long term storage and shipment.

If any damage is observed, contact the Riverhawk Company to schedule a maintenance inspection.

12.1 Hydraulic Tensioner Storage

Check the tensioner for any damage:

1. Clean puller screw and check for any debris and dents.
2. Knurled interlock fitting should be clean and free to rotate.
3. Inspect tensioner guard for any signs of damage. Bent guards must be replaced.

If any damage is observed, contact the Riverhawk Company to schedule a maintenance inspection.

Place protective plastic cap into the hydraulic port.

Coat the hydraulic tensioner and foot with a light coat of oil and place the tensioner into the original shipping container.

Refer to hydraulic pump instruction manual for pump storage procedures.

12.3 Store shipping container

Secure the hydraulic pump and hydraulic tensioner into the original shipping containers using the supplied wood braces.

Seal the original shipping container and store under shelter and protected from moisture, sand, and grit.

Riverhawk Company
215 Clinton Road.
New Hartford, NY 13413
Tel: 315-768-4855
Fax: 315-768-4941
Email: info@riverhawk.com

GE DRAWING NUMBER	REV.
373A4054	
FIRST MADE FOR:	SH.

13.0 Revision History

Revision Letter	Effective Date	Description
-	Sept 6, 2012	Released

Riverhawk Company
215 Clinton Road.
New Hartford, NY 13413
Tel: 315-768-4855
Fax: 315-768-4941
Email: info@riverhawk.com

GE DRAWING NUMBER	REV.
373A4054	
FIRST MADE FOR:	SH.

Appendix A

Frequently Asked Questions:

This section contains some frequently asked questions and problems. If the steps listed here do not solve your problem, contact the Riverhawk Company thru our website, email, or phone call.

Q: A tensioner has pulled itself out of the stud's conical threads. Can I continue using a tensioner on this stud?

A: No. Both the tensioner and the stud may have been damaged and must be removed from the work area. If the stud is tensioned, a Nut Buster repair kit, from Riverhawk, must be used to remove the damaged stud by drilling out the nut. Leaving a damaged stud in place will lead to a safety hazard on future outages.

Riverhawk can supply a replacement stud and nut based on the initial weight certification supplied with the hardware set (see section 4.2). The damaged tensioner should also be returned to Riverhawk for inspection and repair.

If a stud must be left in place, paint the damaged stud with a generous amount of indelible, bright-colored paint. Notify the appropriate GE Safety and Service personnel. Note the location of the damaged stud in the services notes for the machine.

Q: The hydraulic tensioner has been taken up to its final pressure. The final stretch length is short of the final stretch target. What is the next step?

A: Do not increase the hydraulic pressure. Check if the hydraulic pump is set to the right pressure. Install the tensioner and re-pressurize the tensioner to the final pressure then recheck the stretch measurement. If the stretch value is still short, remove the stud from the hole and re-measure the stud's initial length then try to install the stud again.

Riverhawk Company
215 Clinton Road.
New Hartford, NY 13413
Tel: 315-768-4855
Fax: 315-768-4941
Email: info@riverhawk.com

GE DRAWING NUMBER	REV.
373A4054	
FIRST MADE FOR:	SH.

Q: The hydraulic tensioner has been taken up to its final pressure. The final stretch length is larger than the final stretch target. What is the next step?

A: Remove the stud from the bolt hole. Check if the hydraulic pump is set to the right pressure. Re-measure the stud's initial length then try to install the stud again.

Q: The tensioner is at its final pressure, but the nut cannot be loosened.

A: If the nuts cannot be loosened at the final pressure, continually increasing the pressure will not help and can be dangerous and in some cases make it harder to remove the nut. Check the nut to see if its set screws have been loosened. Check for and remove any corrosion around the nut's threads.

Q: How do I clean the conical threads on a stud?

A: The conical threads are best cleaned using a spiral wound brass brush in a drill as described in section 5.2. For detailed description refer to Instruction Manual IM-220.

Q: During the initial steps of removing a tensioned stud, the stick-out length is found to be wrong.

A: Do not proceed. Refer to Instruction Manual IM-226 or contact Riverhawk for assistance. With the wrong stick-out length, the hydraulic tensioner has a limited stroke and may not work properly and can be damaged.

Q: The hydraulic pump appears to be leaking.

A: See IM-293 – Instruction Manual for GE Hydraulic Pump Kits

Riverhawk Company
215 Clinton Road.
New Hartford, NY 13413
Tel: 315-768-4855
Fax: 315-768-4941
Email: info@riverhawk.com

GE DRAWING NUMBER	REV.
373A4054	
FIRST MADE FOR:	SH.

Appendix B1

STRETCH RECORD SHEET
FOR THE TURBINE END

TURBINE NUMBER:

DATE:

TECHNICIAN:

SUPERVISOR:

NOTE: FINAL STRETCH = FINAL LENGTH – STARTING LENGTH
(EXAMPLE: FINAL STRETCH = 10.552" – 10.541" = .011" STRETCH

HOLE NUMBER	STARTING LENGTH	FINAL LENGTH	FINAL STRETCH
1			
9			
2			
10			
3			
11			
4			
12			
5			
13			
6			
14			
7			
15			
8			
16			

Riverhawk Company
215 Clinton Road.
New Hartford, NY 13413
Tel: 315-768-4855
Fax: 315-768-4941
Email: info@riverhawk.com

GE DRAWING NUMBER	REV.
373A4054	
FIRST MADE FOR:	SH.

Appendix B2

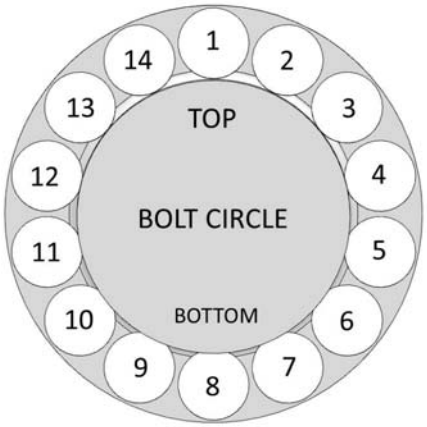

STRETCH RECORD SHEET
FOR THE TURBINE COUPLING
TO SUBSTITUTE SHAFT

TURBINE NUMBER:

DATE:

TECHNICIAN:

SUPERVISOR:

NOTE: FINAL STRETCH = FINAL LENGTH – STARTING LENGTH
(EXAMPLE: FINAL STRETCH = 10.552” – 10.541” = .011” STRETCH

HOLE NUMBER	STARTING LENGTH	FINAL LENGTH	FINAL STRETCH
1			
8			
2			
9			
3			
10			
4			
11			
5			
12			
6			
13			
7			
14			

Riverhawk Company
215 Clinton Road.
New Hartford, NY 13413
Tel: 315-768-4855
Fax: 315-768-4941
Email: info@riverhawk.com

GE DRAWING NUMBER	REV.
373A4054	
FIRST MADE FOR:	SH.

Appendix B3

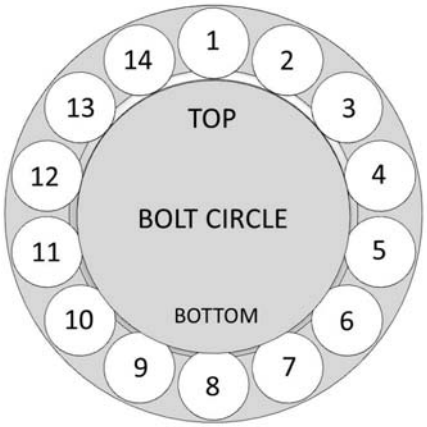

STRETCH RECORD SHEET
FOR SUBSTITUTE SHAFT TO
GENERATOR COUPLING

TURBINE NUMBER:

DATE:

TECHNICIAN:

SUPERVISOR:

NOTE: FINAL STRETCH = FINAL LENGTH – STARTING LENGTH
(EXAMPLE: FINAL STRETCH = 10.552” – 10.541” = .011” STRETCH

HOLE NUMBER	STARTING LENGTH	FINAL LENGTH	FINAL STRETCH
1			
8			
2			
9			
3			
10			
4			
11			
5			
12			
6			
13			
7			
14			

Riverhawk Company
215 Clinton Road.
New Hartford, NY 13413
Tel: 315-768-4855
Fax: 315-768-4941
Email: info@riverhawk.com

GE DRAWING NUMBER	REV.
373A4054	
FIRST MADE FOR:	SH.

Appendix B4

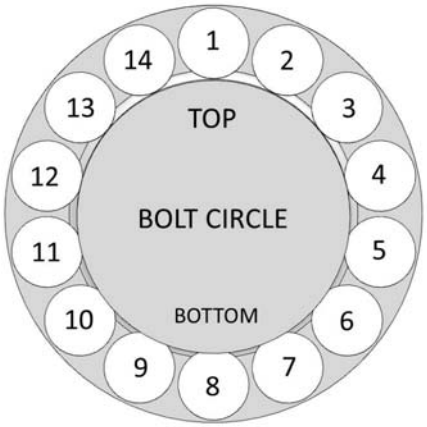

STRETCH RECORD SHEET
FOR THE GENERATOR COUPLING
TO GENERATOR

TURBINE NUMBER:

DATE:

TECHNICIAN:

SUPERVISOR:

NOTE: FINAL STRETCH = FINAL LENGTH – STARTING LENGTH
(EXAMPLE: FINAL STRETCH = 10.552” – 10.541” = .011” STRETCH

HOLE NUMBER	STARTING LENGTH	FINAL LENGTH	FINAL STRETCH
1			
8			
2			
9			
3			
10			
4			
11			
5			
12			
6			
13			
7			
14			

Riverhawk Company
215 Clinton Road.
New Hartford, NY 13413
Tel: 315-768-4855
Fax: 315-768-4941
Email: info@riverhawk.com

GE DRAWING NUMBER	REV.
373A4054	
FIRST MADE FOR:	SH.

Appendix C

EU Declaration of Conformity:

Riverhawk Company
215 Clinton Road
New Hartford, NY 13413, USA

Product description:
269B8736 (HT-5506 - Hydraulic Tensioner)
359B2502 (HT-5506-IT - Hydraulic Tensioner)

The products specified above comply with the CE directives and carries the CE mark accordingly

215 Clinton Road.
New Hartford, NY 13413
Tel: 315-768-4855
Fax: 315-768-4941
Email: info@riverhawk.com

GE DRAWING NUMBER	REV.
373A4054	
FIRST MADE FOR:	SH.